DATASHEET

Raspberry Pi 4 Model B

Release 1

June 2019

Copyright 2019 Raspberry Pi (Trading) Ltd. All rights reserved.

Table 1: Release History

Release	Date	Description
1	21/06/2019	First release

The latest release of this document can be found at `https://www.raspberrypi.org`

Contents

1 Introduction **5**

2 Features **6**
2.1 Hardware 6
2.2 Interfaces 6
2.3 Software 7

3 Mechanical Specification **7**

4 Electrical Specification **7**
4.1 Power Requirements 9

5 Peripherals **9**
5.1 GPIO Interface 9
5.1.1 GPIO Pin Assignments 9
5.1.2 GPIO Alternate Functions 10
5.1.3 Display Parallel Interface (DPI) 11
5.1.4 SD/SDIO Interface 11
5.2 Camera and Display Interfaces 11
5.3 USB 11
5.4 HDMI 11
5.5 Audio and Composite (TV Out) 11
5.6 Temperature Range and Thermals 11

6 Availability **12**

7 Support **12**

List of Figures

1 Mechanical Dimensions 7
2 Digital IO Characteristics 8
3 GPIO Connector Pinout 9

List of Tables

1 Release History 1
2 Absolute Maximum Ratings 8
3 DC Characteristics 8
4 Digital I/O Pin AC Characteristics 8
5 Raspberry Pi 4 GPIO Alternate Functions 10

1 Introduction

The Raspberry Pi 4 Model B (Pi4B) is the first of a new generation of Raspberry Pi computers supporting more RAM and with siginficantly enhanced CPU, GPU and I/O performance; all within a similar form factor, power envelope and cost as the previous generation Raspberry Pi 3B+.

The Pi4B is avaiable with either 1, 2 and 4 Gigabytes of LPDDR4 SDRAM.

2 Features

2.1 Hardware

- Quad core 64-bit ARM-Cortex A72 running at 1.5GHz
- 1, 2 and 4 Gigabyte LPDDR4 RAM options
- H.265 (HEVC) hardware decode (up to 4Kp60)
- H.264 hardware decode (up to 1080p60)
- VideoCore VI 3D Graphics
- Supports dual HDMI display output up to 4Kp60

2.2 Interfaces

- 802.11 b/g/n/ac Wireless LAN
- Bluetooth 5.0 with BLE
- 1x SD Card
- 2x micro-HDMI ports supporting dual displays up to 4Kp60 resolution
- 2x USB2 ports
- 2x USB3 ports
- 1x Gigabit Ethernet port (supports PoE with add-on PoE HAT)
- 1x Raspberry Pi camera port (2-lane MIPI CSI)
- 1x Raspberry Pi display port (2-lane MIPI DSI)
- 28x user GPIO supporting various interface options:
  - Up to 6x UART
  - Up to 6x I2C
  - Up to 5x SPI
  - 1x SDIO interface
  - 1x DPI (Parallel RGB Display)
  - 1x PCM
  - Up to 2x PWM channels
  - Up to 3x GPCLK outputs

2.3 Software

- ARMv8 Instruction Set
- Mature Linux software stack
- Actively developed and maintained
  - Recent Linux kernel support
  - Many drivers upstreamed
  - Stable and well supported userland
  - Availability of GPU functions using standard APIs

3 Mechanical Specification

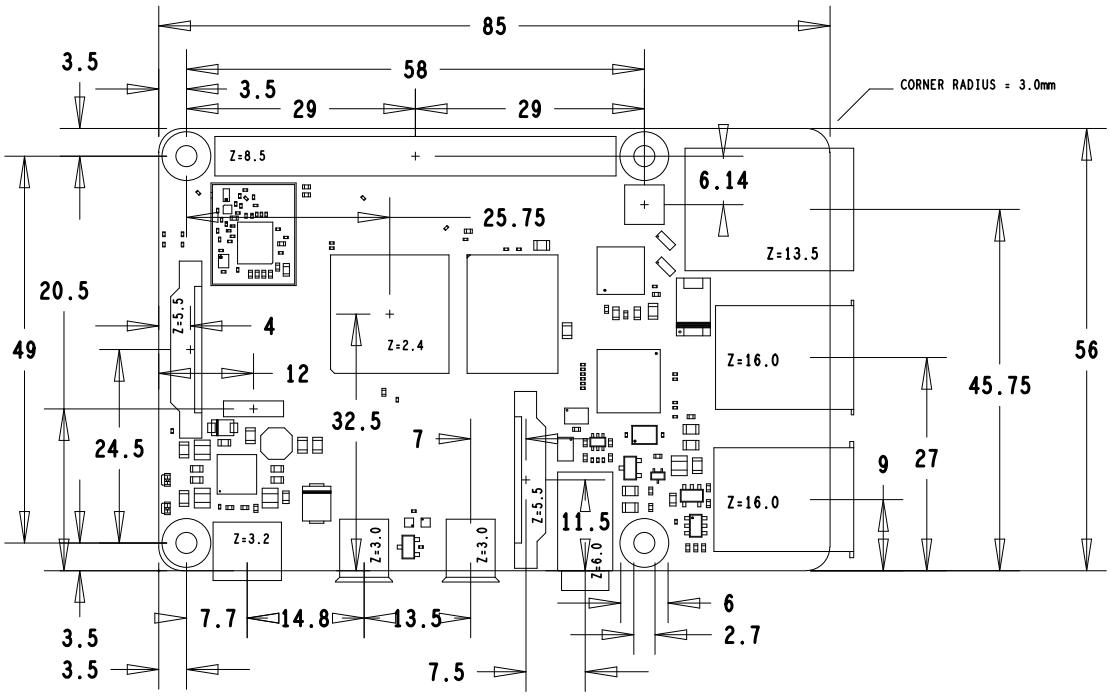

Figure 1: Mechanical Dimensions

4 Electrical Specification

Caution! Stresses above those listed in Table 2 may cause permanent damage to the device. This is a stress rating only; functional operation of the device under these or any other conditions above those listed in the operational sections of this specification is not implied. Exposure to absolute maximum rating conditions for extended periods may affect device reliability.

Symbol	Parameter	Minimum	Maximum	Unit
VIN	5V Input Voltage	-0.5	6.0	V

Table 2: Absolute Maximum Ratings

Please note that VDD_IO is the GPIO bank voltage which is tied to the on-board 3.3V supply rail.

Symbol	Parameter	Conditions	Minimum	Typical	Maximum	Unit
V_{IL}	Input low voltage[a]	VDD_IO = 3.3V	-	-	TBD	V
V_{IH}	Input high voltage[a]	VDD_IO = 3.3V	TBD	-	-	V
I_{IL}	Input leakage current	TA = +85°C	-	-	TBD	μA
C_{IN}	Input capacitance	-	-	TBD	-	pF
V_{OL}	Output low voltage[b]	VDD_IO = 3.3V, IOL = -2mA	-	-	TBD	V
V_{OH}	Output high voltage[b]	VDD_IO = 3.3V, IOH = 2mA	TBD	-	-	V
I_{OL}	Output low current[c]	VDD_IO = 3.3V, VO = 0.4V	TBD	-	-	mA
I_{OH}	Output high current[c]	VDD_IO = 3.3V, VO = 2.3V	TBD	-	-	mA
R_{PU}	Pullup resistor	-	TBD	-	TBD	kΩ
R_{PD}	Pulldown resistor	-	TBD	-	TBD	kΩ

[a] Hysteresis enabled
[b] Default drive strength (8mA)
[c] Maximum drive strength (16mA)

Table 3: DC Characteristics

Pin Name	Symbol	Parameter	Minimum	Typical	Maximum	Unit
Digital outputs	t_{rise}	10-90% rise time[a]	-	TBD	-	ns
Digital outputs	t_{fall}	90-10% fall time[a]	-	TBD	-	ns

[a] Default drive strength, CL = 5pF, VDD_IO = 3.3V

Table 4: Digital I/O Pin AC Characteristics

Figure 2: Digital IO Characteristics

4.1 Power Requirements

The Pi4B requires a good quality USB-C power supply capable of delivering 5V at 3A. If attached downstream USB devices consume less than 500mA, a 5V, 2.5A supply may be used.

5 Peripherals

5.1 GPIO Interface

The Pi4B makes 28 BCM2711 GPIOs available via a standard Raspberry Pi 40-pin header. This header is backwards compatible with all previous Raspberry Pi boards with a 40-way header.

5.1.1 GPIO Pin Assignments

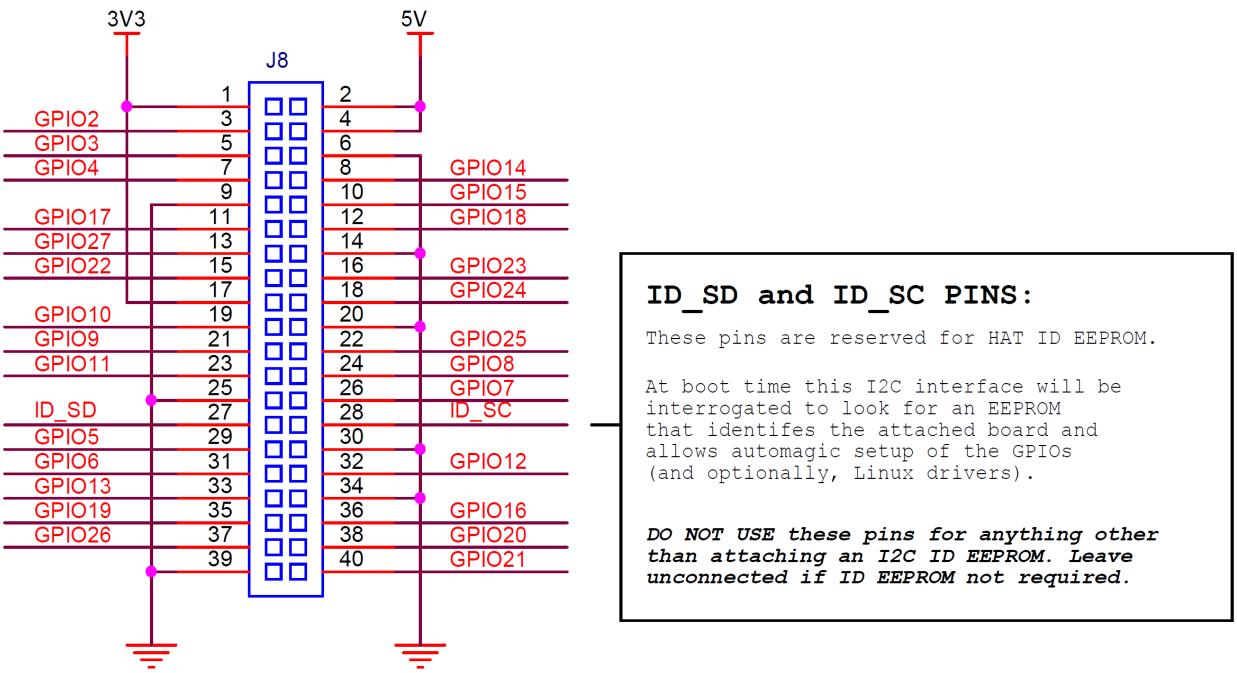

Figure 3: GPIO Connector Pinout

As well as being able to be used as straightforward software controlled input and output (with programmable pulls), GPIO pins can be switched (multiplexed) into various other modes backed by dedicated peripheral blocks such as I2C, UART and SPI.

In addition to the standard peripheral options found on legacy Pis, extra I2C, UART and SPI peripherals have been added to the BCM2711 chip and are available as further mux options on the Pi4. This gives users much more flexibility when attaching add-on hardware as compared to older models.

5.1.2 GPIO Alternate Functions

GPIO	Default Pull	ALT0	ALT1	ALT2	ALT3	ALT4	ALT5
0	High	SDA0	SA5	PCLK	SPI3_CE0_N	TXD2	SDA6
1	High	SCL0	SA4	DE	SPI3_MISO	RXD2	SCL6
2	High	SDA1	SA3	LCD_VSYNC	SPI3_MOSI	CTS2	SDA3
3	High	SCL1	SA2	LCD_HSYNC	SPI3_SCLK	RTS2	SCL3
4	High	GPCLK0	SA1	DPI_D0	SPI4_CE0_N	TXD3	SDA3
5	High	GPCLK1	SA0	DPI_D1	SPI4_MISO	RXD3	SCL3
6	High	GPCLK2	SOE_N	DPI_D2	SPI4_MOSI	CTS3	SDA4
7	High	SPI0_CE1_N	SWE_N	DPI_D3	SPI4_SCLK	RTS3	SCL4
8	High	SPI0_CE0_N	SD0	DPI_D4	-	TXD4	SDA4
9	Low	SPI0_MISO	SD1	DPI_D5	-	RXD4	SCL4
10	Low	SPI0_MOSI	SD2	DPI_D6	-	CTS4	SDA5
11	Low	SPI0_SCLK	SD3	DPI_D7	-	RTS4	SCL5
12	Low	PWM0	SD4	DPI_D8	SPI5_CE0_N	TXD5	SDA5
13	Low	PWM1	SD5	DPI_D9	SPI5_MISO	RXD5	SCL5
14	Low	TXD0	SD6	DPI_D10	SPI5_MOSI	CTS5	TXD1
15	Low	RXD0	SD7	DPI_D11	SPI5_SCLK	RTS5	RXD1
16	Low	FL0	SD8	DPI_D12	CTS0	SPI1_CE2_N	CTS1
17	Low	FL1	SD9	DPI_D13	RTS0	SPI1_CE1_N	RTS1
18	Low	PCM_CLK	SD10	DPI_D14	SPI6_CE0_N	SPI1_CE0_N	PWM0
19	Low	PCM_FS	SD11	DPI_D15	SPI6_MISO	SPI1_MISO	PWM1
20	Low	PCM_DIN	SD12	DPI_D16	SPI6_MOSI	SPI1_MOSI	GPCLK0
21	Low	PCM_DOUT	SD13	DPI_D17	SPI6_SCLK	SPI1_SCLK	GPCLK1
22	Low	SD0_CLK	SD14	DPI_D18	SD1_CLK	ARM_TRST	SDA6
23	Low	SD0_CMD	SD15	DPI_D19	SD1_CMD	ARM_RTCK	SCL6
24	Low	SD0_DAT0	SD16	DPI_D20	SD1_DAT0	ARM_TDO	SPI3_CE1_N
25	Low	SD0_DAT1	SD17	DPI_D21	SD1_DAT1	ARM_TCK	SPI4_CE1_N
26	Low	SD0_DAT2	TE0	DPI_D22	SD1_DAT2	ARM_TDI	SPI5_CE1_N
27	Low	SD0_DAT3	TE1	DPI_D23	SD1_DAT3	ARM_TMS	SPI6_CE1_N

Table 5: Raspberry Pi 4 GPIO Alternate Functions

Table 5 details the default pin pull state and available alternate GPIO functions. Most of these alternate peripheral functions are described in detail in the BCM2711 Peripherals Specification document which can be downloaded from the hardware documentation section of the website.

5.1.3 Display Parallel Interface (DPI)

A standard parallel RGB (DPI) interface is available the GPIOs. This up-to-24-bit parallel interface can support a secondary display.

5.1.4 SD/SDIO Interface

The Pi4B has a dedicated SD card socket which suports 1.8V, DDR50 mode (at a peak bandwidth of 50 Megabytes / sec). In addition, a legacy SDIO interface is available on the GPIO pins.

5.2 Camera and Display Interfaces

The Pi4B has 1x Raspberry Pi 2-lane MIPI CSI Camera and 1x Raspberry Pi 2-lane MIPI DSI Display connector. These connectors are backwards compatible with legacy Raspberry Pi boards, and support all of the available Raspberry Pi camera and display peripherals.

5.3 USB

The Pi4B has 2x USB2 and 2x USB3 type-A sockets. Downstream USB current is limited to approximately 1.1A in aggregate over the four sockets.

5.4 HDMI

The Pi4B has 2x micro-HDMI ports, both of which support CEC and HDMI 2.0 with resolutions up to 4Kp60.

5.5 Audio and Composite (TV Out)

The Pi4B supports near-CD-quality analogue audio output and composite TV-output via a 4-ring TRS 'A/V' jack.

The analog audio output can drive 32 Ohm headphones directly.

5.6 Temperature Range and Thermals

The recommended ambient operating temperature range is 0 to 50 degrees Celcius.

To reduce thermal output when idling or under light load, the Pi4B reduces the CPU clock speed and voltage. During heavier load the speed and voltage (and hence thermal output) are increased. The internal governor will throttle back both the CPU speed and voltage to make sure the CPU temperature never exceeds 85 degrees C.

The Pi4B will operate perfectly well without any extra cooling and is designed for sprint performance - expecting a light use case on average and ramping up the CPU speed when needed (e.g. when loading a webpage). If a user wishes to load the system continually or operate it at a high termperature at full performance, further cooling may be needed.

6 Availability

Raspberry Pi guarantee availability Pi4B until at least January 2026.

7 Support

For support please see the hardware documentation section of the Raspberry Pi website and post questions to the Raspberry Pi forum.